anwis

# SOLIDBOX EXTERNAL VENETIAN BLINDS ORDER FORM

**CUSTOMER:** .....

.....

Order No. .....

Ordered on .....

Date of delivery .....

**SOLIDBOX cassette – options**

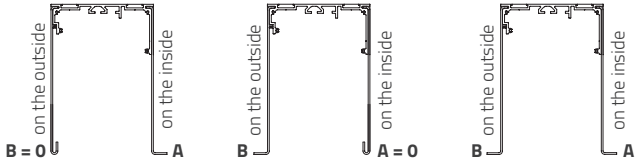


**Cassette varnishing options**

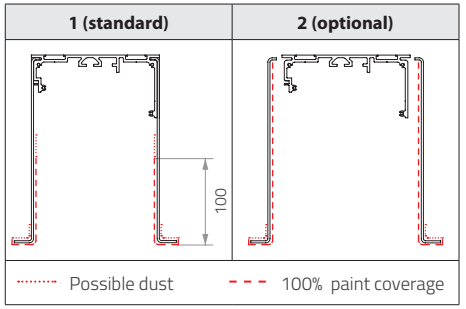


**Type of electric drive**

**ELERO**

| | |
|---|---|
| | JA SOFT (standard) |
| | JA COMFORT |
| | JA COMFORT 868 |

**SOMFY**

| | |
|---|---|
| | WT (standard) |
| | WT PROTECT |
| | RTS |
| | io-homecontrol PROTECT |

| No. | Overall width (mm) | Overall height (mm) | Quantity | Slats | | | Colour of bottom bar | Colour of ladder and cloth tape [1] | | Colour of plastic components [2] | | Slat rotation (C80 slats) [3] | | SOLIDBOX cassette | | | | | | | | | Guide channels | | | | | | | Control side (from the inside) | | |
|---|---|---|---|---|---|---|---|---|---|---|---|---|---|---|---|---|---|---|---|---|---|---|---|---|---|---|---|---|---|---|---|---|
| | | | | Type | | Colour | | | | | | | | | | XPS thickness | | | Varnising [4] | | | | | | | | Guide channel drilling | | | | | |
| | | | | C-80 | Z-80 | | | grey | black | grey | black | 90° | 180° | Dimension A (from the inside) | Dimension B (from the outside) | 15 mm | 20 mm | 35 mm | option 1 | option 2 | Colour | Anchor bolt | 95 mm | 95 mm + spacer 20 mm | 110 mm | 110 mm + spacer 20 mm | A | B | Colour | left | centre | right |
| 1 | 2 | 3 | 4 | 5 | | | 6 | 7 | | 8 | | 9 | | 10 | | | | | | | | | 11 | | | | | | | 12 | | |
| | | | | | | | | | | | | | | | | | | | | | | | | | | | | | | | | |
| | | | | | | | | | | | | | | | | | | | | | | | | | | | | | | | | |
| | | | | | | | | | | | | | | | | | | | | | | | | | | | | | | | | |
| | | | | | | | | | | | | | | | | | | | | | | | | | | | | | | | | |
| | | | | | | | | | | | | | | | | | | | | | | | | | | | | | | | | |
| | | | | | | | | | | | | | | | | | | | | | | | | | | | | | | | | |
| | | | | | | | | | | | | | | | | | | | | | | | | | | | | | | | | |
| | | | | | | | | | | | | | | | | | | | | | | | | | | | | | | | | |
| | | | | | | | | | | | | | | | | | | | | | | | | | | | | | | | | |
| | | | | | | | | | | | | | | | | | | | | | | | | | | | | | | | | |

**Please note:**

(1) If no colour has been selected, the blind will be fitted with **ladder and cloth tape in grey.**

(2) If no colour has been selected, the blind will be fitted with **plastic components in grey.**

(3) If no degree of slat rotation has been indicated (concerns C80 slats) the blind provided will be fitted with 90° rotating slats.

(4) If no varnishing option has been selected, option 1 will apply.

1. The standard packet of slats is mounted on automatic brackets fixing head rail.
2. The standard packet of slats is fitted with aluminium guide pins.
3. **IMPORTANT: Manufacturer reserves the right to apply cassettes of the smallest size.**

**Slat rotation**

| | 90° | 180° |
|---|---|---|
| C-80 | ✓ | ✓ |
| Z-90 | ✓ | |

**Guide channel drilling**

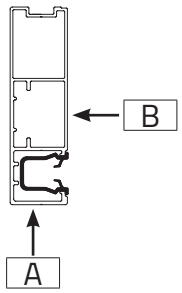


**COMMENTS:**

.....

*legible signature of the Customer*

*edition July 2020*